AD1-900: 958*375*235MM

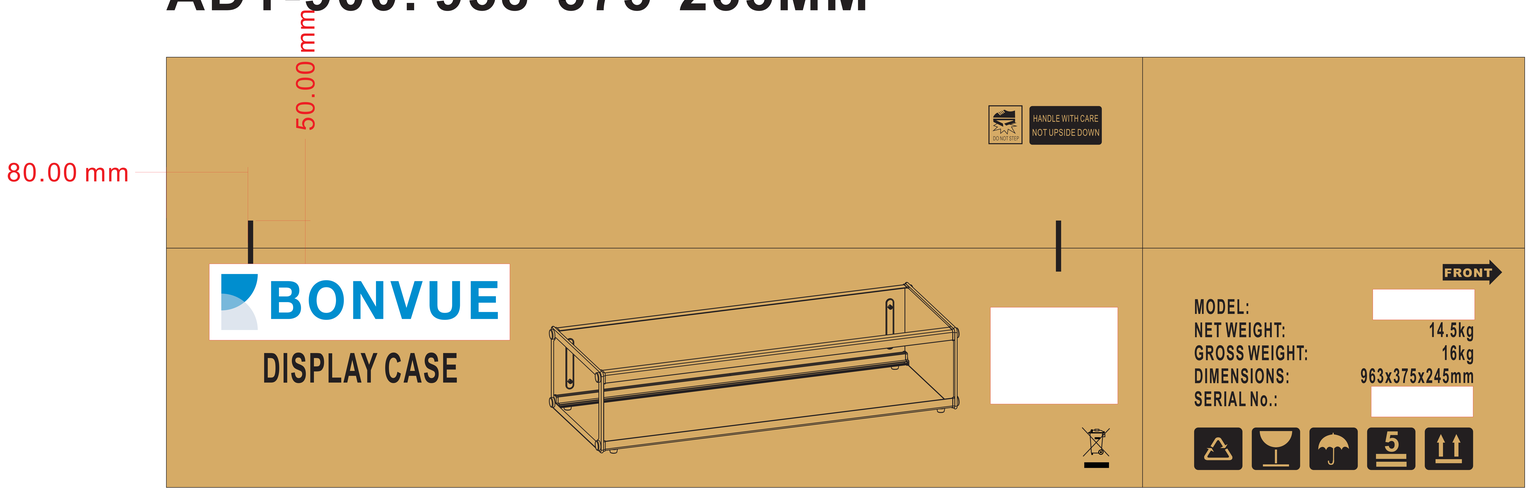

AD1-900

SIZE:125*95MM

AD1-1200: 1238*375*235MM

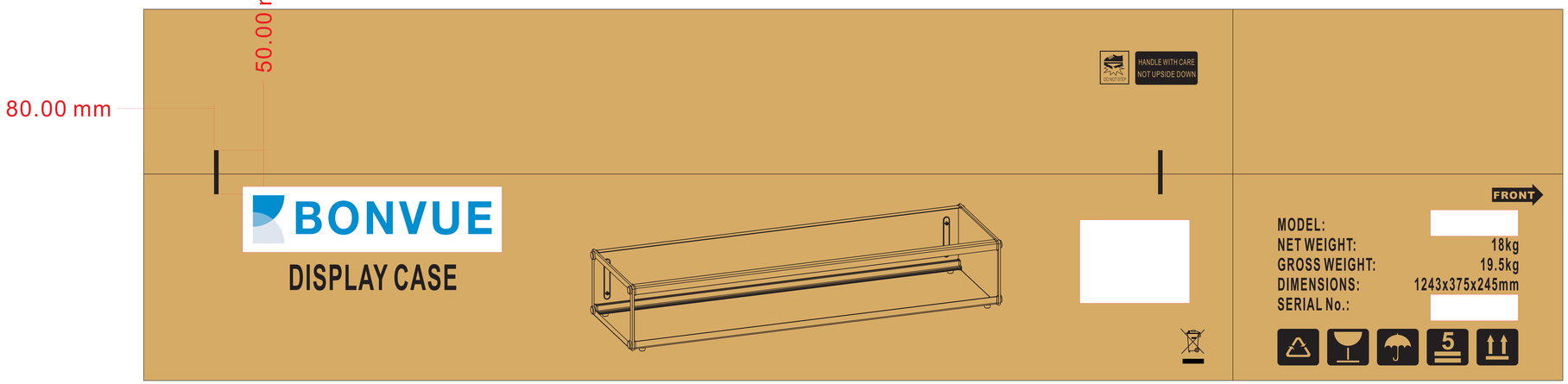

AD1-1200