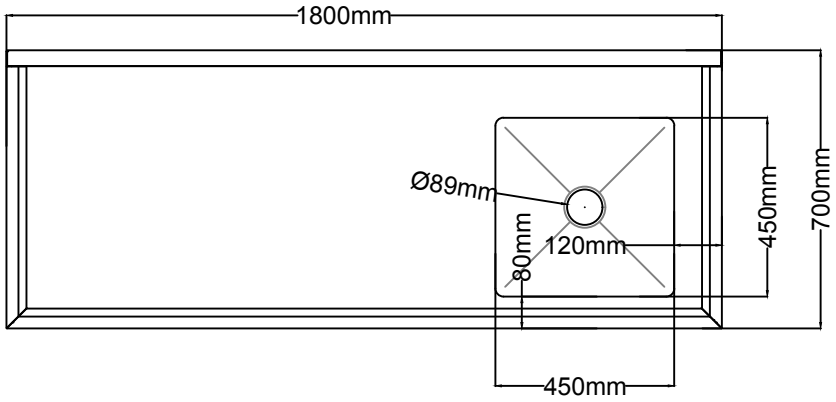

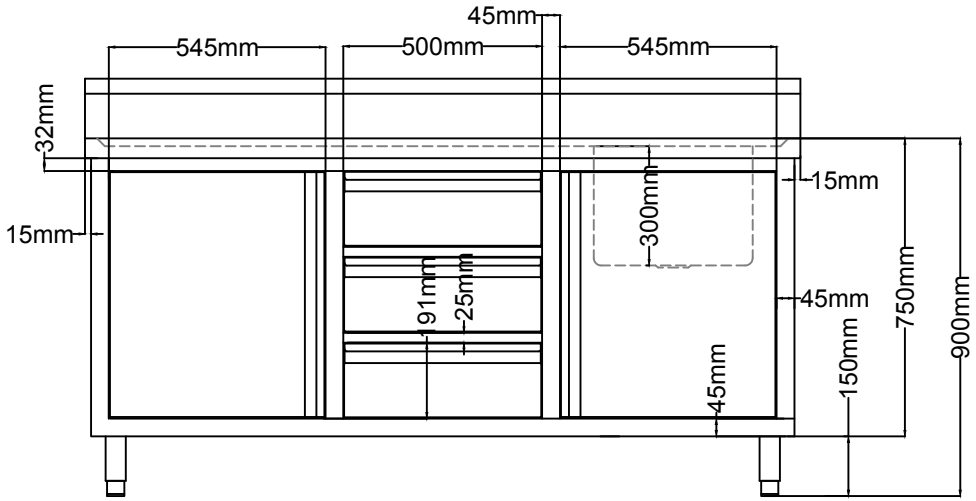

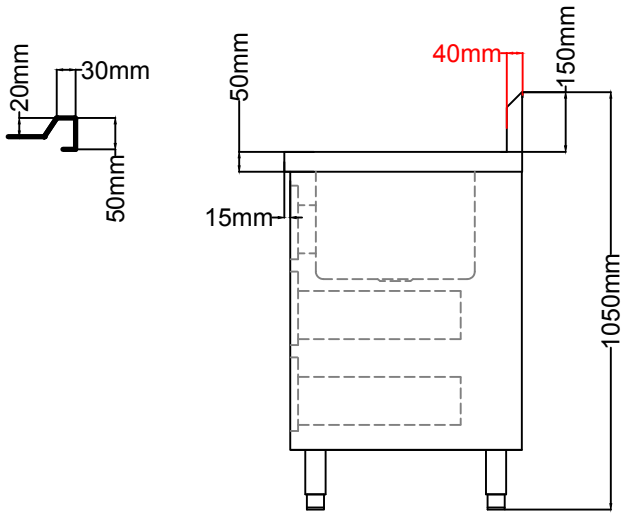

SC-7-1800R-H	QUANTITY:	
DRAWN BY: GAO	Federal Hospitality Equipment	
APPROVED BY: HENRY	DATE: 02/19/25	PAGE: 1 OF 1